FIBERSTARS™
AN ENERGY FOCUS COMPANY

CRE2508
FLEX-ARM

TYPE:	ORDERING CODE:	APPROVAL:
JOB:	CRE2508	DATE:

SPECIFICATIONS

Max Overall Dimensions: 1.969” (OD) 3.858” (H) (50mm x 98mm) plus length of the arm
Tube Diameter: 0.335” (8.5mm)
Drop below ceiling: 6.299” (160mm) vertical max.
Rough-in / Cut out: 1.575” (40mm)
Recess: 1.378” (35mm) excluding fiber
Primary Material: Aluminum, Steel Arm
Lens Type: Clear glass (60¡) or lens (15-35¡)
Fiber Type: Recommended FSPT 25
Finishes: Black, White, Gold, Silver
Ferrule Requirement: Special ferrule required
Mounting: Spring clips included
Note: Consult factory for custom length

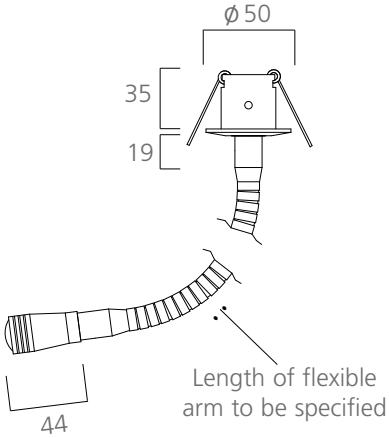

© 2009 Energy Focus, Inc. All rights reserved. Energy Focus, Inc. reserves the right to change specifications for product improvement.