| TYPE: | ORDERING CODE: | APPROVAL: |
|---|---|---|
| JOB: | CRE2512 | DATE: |

## SPECIFICATIONS

Max Overall Dimensions: 1.969” (OD) x 2.480” (H) (50mm x 63mm)
Trim / Flange Dimensions: 1.969” (OD) x 1.102” (H) (50mm x 28mm)
Aperture Diameter: 0.827” (21mm)
Rough-in / Cut out: 1.575” (40mm)
Recess: 1.378” (35mm) excluding fiber
Primary Material: Metal
Lens Type: Fixed lens
Fiber Type: Recommended FSPT 12-75
Finishes: Black, White, Gold, Silver
Ferrule Requirement: 8mm or 10mm ferrule
Mounting: Spring clips included

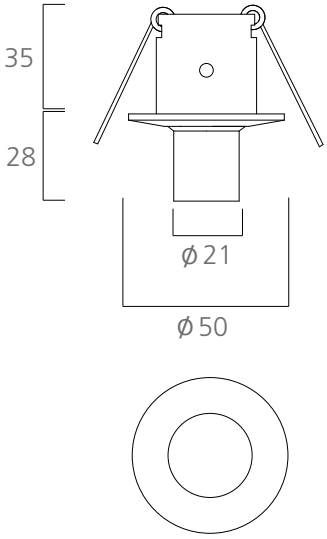



© 2009 Energy Focus, Inc. All rights reserved. Energy Focus, Inc. reserves the right to change specifications for product improvement.